Precast Concrete

Pumping Unit Base

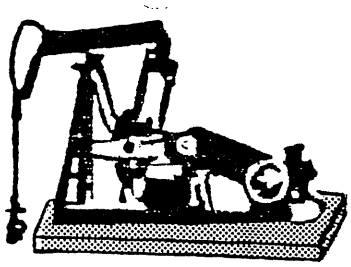

Pre-Stressed High Strength Quality Casting

DESIGNED FOR EASY
HANDLING AND PLACEMENT

Top View

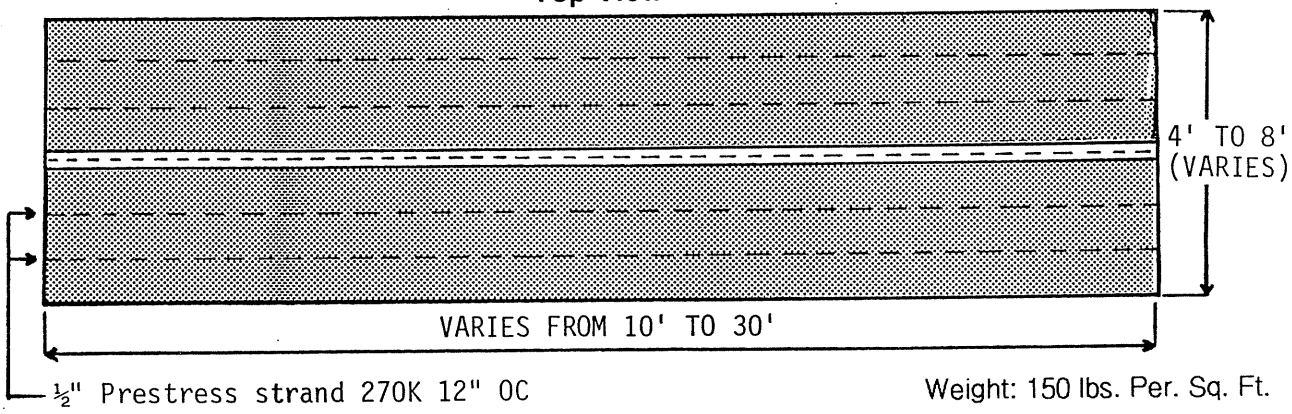

Weight: 150 lbs. Per. Sq. Ft.

End View

Standard size in stock 6'X 24'X 12" or add our 6'X 6'X 12" extension for Larger Bases. Other sizes made and kept in stock when needed.
LET US MAKE THE BASES YOU NEED!

Side View

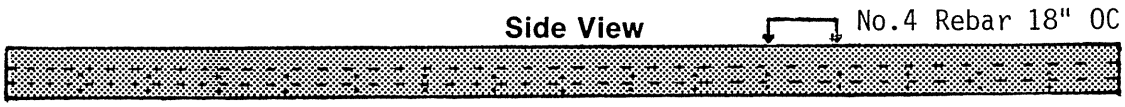

Bolt Detail

Hold down Plate Unit w/bolt can be furnished with Pumping Base

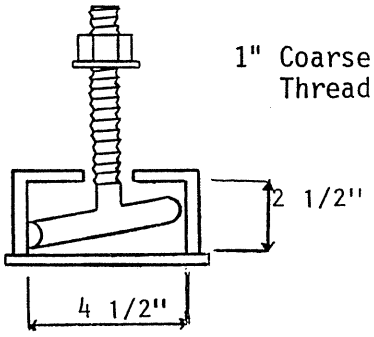

Ready for PICK-UP from our yard or we will DELIVER to the site desired. These bases are engineered to be transfered from location to location YOU CAN RETAIN YOUR ORIGINAL INVESTMENT!

Several Major Oil Companies have been using our bases with much success!

vaughn concrete products, inc.

12650 Tucson Street • Henderson, Colorado 80640 • 303-659-3747, Fax 303-659-1333
2671 So. Greeley Hwy • Cheyenne, Wyoming 82007 • 307-634-0695, Fax 307-634-0694
10021 Amarillo Blvd. East • Amarillo, Texas 79107 • 806-374-3747, Fax 806-335-3717